ISSN (Print) 1226-1750
ISSN (Online) 2233-6656
Journal of Magnetics 19(4), 357-364 (2014) http://dx.doi.org/10.4283/JMAG.2014.19.4.357

Changes in Poly ADP Ribose Polymerase Immune Response Cells of Cerebral Ischaemia Induced Rat by Transcranial Magnetic Stimulation of Alternating Current Approach

Hyun-Mo Koo[1] and Whi-Young Kim[2]*

[1]*Department of Physical Therapy, College of Science, Kyung sung University, 309 Suyeong-ro, Nam-gu, Busan 608-736, Korea*
[2]*Department of Biomedical Engineering, Dongju College University, 15-1 San, Koijeng-dong, Saha-gu, Busan 602-715, Korea*

(Received 28 September 2014, Received in final form 13 October 2014, Accepted 13 October 2014)

This study examined effect of a transcranial magnetic stimulation device with a commercial-frequency approach on the neuronal cell death caused ischemia. For a simple transcranial magnetic stimulation device, the experiment was conducted on an ischemia induced rat by transcranial magnetic stimulation of a commercial-frequency approach, controlling the firing angle using a Triac power device. The transcranial magnetic stimulation device was controlled at a voltage of 220 V 60 Hz and the trigger of the Triac gate was varied from 45° up to 135°. Cerebral ischemia was caused by ligating the common carotid artery of male SD rats and reperfusion was performed again to blood after 5 minutes. Protein Expression was examined by Western blotting and the immune response cells reacting to the antibodies of Poly ADP ribose polymerase in the cerebral nerve cells. As a result, for the immune response cells of Poly ADP ribose polymerase related to necrosis, the transcranial magnetic stimulation device suppressed necrosis and had a protective effect on nerve cells. The effect was greatest within 12 hours after ischemia. Therefore, it is believed that in the case of brain damage caused by ischemia, the function of brain cells can be restored and the impairment can be improved by the application of transcranial magnetic stimulation.

Keywords : magnetic stimulation, alternating current, AVR182, poly ADP, ischaemia

1. Introduction

Normal blood flow in the brain is approximately 50 ml/100 g/min. The signaling function of nerve cells is impaired if the blood flow is < 35% of normal, and a brain function disorder occurs. Owing to the depletion of energy, complex biochemical reactions occur, such as a disorder of the cell membrane ion pump, increase in the extracellular concentration of glutamate, excessive intracellular influx of calcium ions, generation of oxygen free radicals, accumulation of lactic acid due to the alkaline glucose metabolism etc.. In addition, structural disorder, infarction of the brain structure is caused because the function of the cell membranes is ultimately destroyed [1]. Ischemia, the largest cause of apoplexy, causes apoptosis and neural synaptic plasticity. Neuron apoptosis is believed to be caused in the long-term by a repetitive state of mild shock with no direct damage to the brain tissue, and necrosis is caused in the areas receiving a direct hit as well as by secondary factors, such as an increase in brain pressure and hypoxia and ischaemia etc. [3]. The brain damage penumbra, which is the area causing cell death in addition to the necrotic area, has no action potential because the cerebral blood flow is reduced in the hypoxic ischemia state but has a penumbral area where ion homeostasis through ATP metabolism and cell membranes is maintained [2, 4]. A penumbral region is the part that can be recovered with the appropriate treatment after hypoxic ischaemia brain damage, and apoptosis is known to be the main form of cell death in this region [5]. Ischemic brain damage causes cell damage of the inner intracranial as well as an external inflammatory response containing the deposition and accumulation of macrophages. Moreover, these macrophages are deposited intensively in the penumbral area 2-3 days after damage [6, 7]. Poly ADP-ribose polymerase involved in necrosis is an enzyme present in the nucleus of various organs including the brain, and is activated when DNA is damag-

©The Korean Magnetics Society. All rights reserved.
*Corresponding author: Tel: +82-51-200-3235
Fax: 82-51-200-3449, e-mail: ndyag@dongju.ac.kr

© 2014 Journal of Magnetics

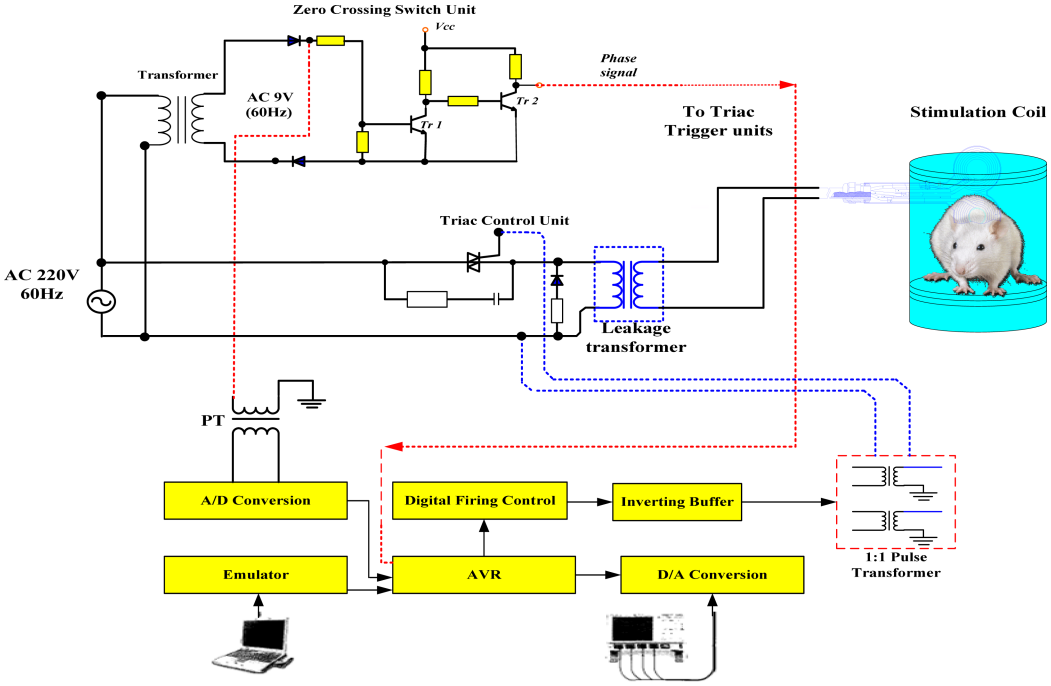

Fig. 1. (Color online) The entire system and is composed of a simulating coil, pulse power device, AVR 182 Chip dedicated circuit, an control part using AVR one-chip-microprocessor.

ed and plays a role in repairing damaged DNA and is involved in cell differentiation and gene expression [8]. In the case of DNA damage, Poly ADP-ribose polymerase repairs the DNA through a process of delivering ADP-ribose to histone and a range of nuclear proteins including itself, and at this time, Poly ADP-ribose. Fig. 1, The entire system and is composed of a simulating coil, pulse power device, AVR 182 Chip dedicated circuit, an control part using AVR one-chip-microprocessor polymerase utilizes NAD^+ as a source of ADP-ribose. If Poly ADP-ribose polymerase is activated excessively, the cells are necrotized by energy loss due to the overuse of ATP and NAD^+. This study conducted the experiment by producing transcranial magnetic stimulation of a commercial frequency approach controlling the firing angle using a Triac power device for a magnetic stimulation device and modeling the cerebral ischaemia induced rat [9]. The device was designed and constructed to complement the problems of the magnetic stimulation device, in which precise pulse control is difficult for the purpose of investigating the brain spinal cord nervous system in a way of observing the muscle reaction and stimulating movement area of the brain [3]. The magnetic stimulation device was composed of a capacitor storing the energy needed for stimulation and the coils forming a strong magnetic field by discharging [10]. The experiment was carried out by controlling transcranial magnetic stimulation at 220 V 60 Hz using a TRIAC power device for the transcranial magnetic stimulation device of precise pulse control and by applying the trigger of the Triac gate to commercial Power varying from 45° to 135°. Fig. 1, The entire system and is composed of a simulating coil, pulse power device, AVR 182 Chip dedicated circuit, an control part using AVR one-chip-microprocessor.

2. Design

2.1. Research model

Male SD rats, 7-week old, specific pathogen free (SPF), and weighing approximately 300 g adapted at least one week in a laboratory environment. Enough food and water were given and the temperature and humidity was 22 ± 1°C and 10-55%, respectively. Maintaining anesthesia of experimental animals with 3% isoflurane, both the common carotid artery parts from a neck median line were incised by 1.5 cm and the pneumogastric nerves etc., were separated. After exposing the common carotid artery and completely ligating both the common carotid arteries with non-absorbent sutures, it was maintained for 8 minutes. Reperfusion of blood was possible by removing the sutures. The animals were divided into the control group without a common carotid artery occlusion, an ischaemia group with a common carotid artery occlusion and a stimulation group, in which the transcranial mag-

netic stimulation device (AC-TMS) of commercial-frequency approach was used after ischemia.

The ischemia group and AC-TMS group were recovered in 6 hours, 12 hours and 24 hours after the common carotid artery occlusion. The ischemia group was recovered only after anesthesia using 3% isoflurane for 30 minutes, and the AC-TMS group was stimulated with 3% isoflurane anesthesia and the transcranial magnetic stimulation device (AC-TMS) of commercial-frequency approach to both the left andright parts of the rats for 30 minutes. AC-TMS stimulation was performed from 10 Hz to 60 Hz and the strength was adjusted according to the movement of muscles around the stimulation points of the rats.

2.2. Magnetic stimulation device of commercial-frequency approach

In this study, a simple transcranial magnetic stimulation device using a Triac (TG35C) semiconductor switch connected to a voltage regulator instead of the main transformer was produced. The desired output power of the transcranial magnetic stimulation device could be obtained by controlling the trigger angle of an alternating current (AC) line and the number of pulses by the leakage transformer. This method does not require a separate power supply device, rectification device, energy storing condenser and resistance of a current limit function. To treat by deeply penetrating into a human body, a waveform with narrow Pulse width and early Rise time is the best. In addition, as noise is less and less heat occurs, it may be the most appropriate for self-care. Therefore, The biphasic type is the appropriate waveform and all PMF (Pulsed Magnetic Field) types at home and abroad employ the Biphasic type. On the other hand, the existing method has the disadvantage in that the frequency (Pulse repetition rate) increases and the energy transfer efficiency decreases sharply and it is impossible to change the pulse shapes diversely. Since the trigger of Triac can be on and off, the pulse rise time can be shortened and various pulse shapes can be made. In addition, the energy transmission loss could be reduced. Figure 1 shows the entire system and is composed of a simulating coil, pulse power device, AVR 182 (Zero Cross Detector) Chip dedicated circuit, an control part using AVR one-chip-microprocessor.

To stimulate the nerves with a magnetic pulse, the electric field size induced by the Time Varying Field should be about the degree that can stimulate nerves. More than tens of V/m of an electric field should be induced to a nerve area and induce an electric field with this size. A 1-2Tesla magnetic field should be switched from the epidermis and the shape of the stimulating coils to a place where there are nerves within a short time of approximately 200 μsec. To create this magnetic field, approximately thousands of As of current should be flowed instantly to the simulating coils with tens of coils, approximately 0.5 cm in diameter. Therefore, if time varying field is recognized around the human body, an eddy current can be induced into the human body like a general electric conductor. An eddy current induced by the time varying field shows the same effect as the current injected directly using electrodes within a human body Fig. 2, Induction of anesthesia and fixation of experiment animal using 2% isoflurane. Fig. 3 It is listed by site stimulation coil with the actual design. Driving circuit using AT90S8535 from the ATMEL. Figure 3 represents a driving circuit using AT90S8535 from the ATMEL company. Fig. 4 MRI-^{18}F-FDG, Induction of global ischemia through common carotid artery occlusion after induction of anesthesia. Fig. 5, We show how to implement the various experiments.

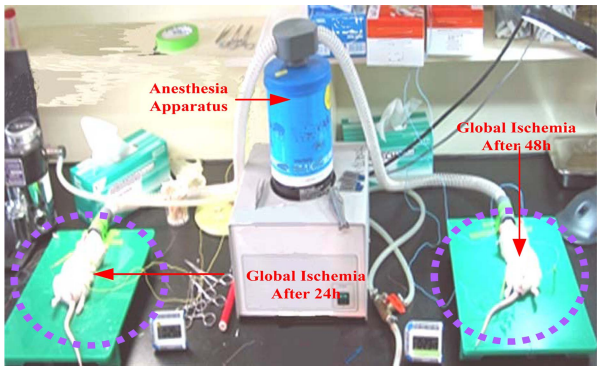

Fig. 2. (Color online) Induction of anesthesia and fixation of experiment animal using 2% isoflurane.

2.3. Behavioral test

After classifying the extracted cerebrum by parts, breaking uniformly and discarding the supernatant by

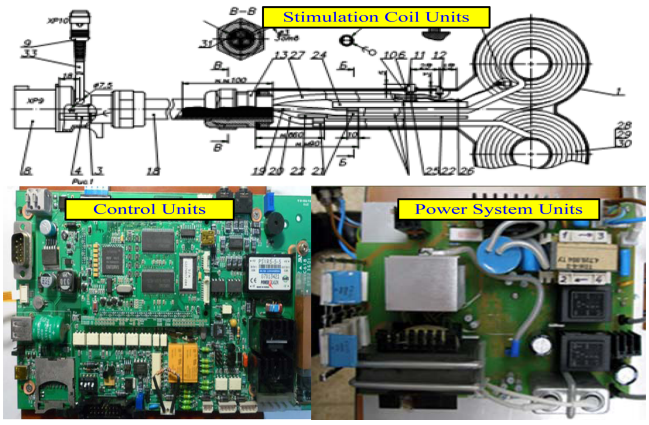

Fig. 3. (Color online) It is listed by site stimulation coil with the actual design and Driving circuit using AT90S8535 from the ATMEL.

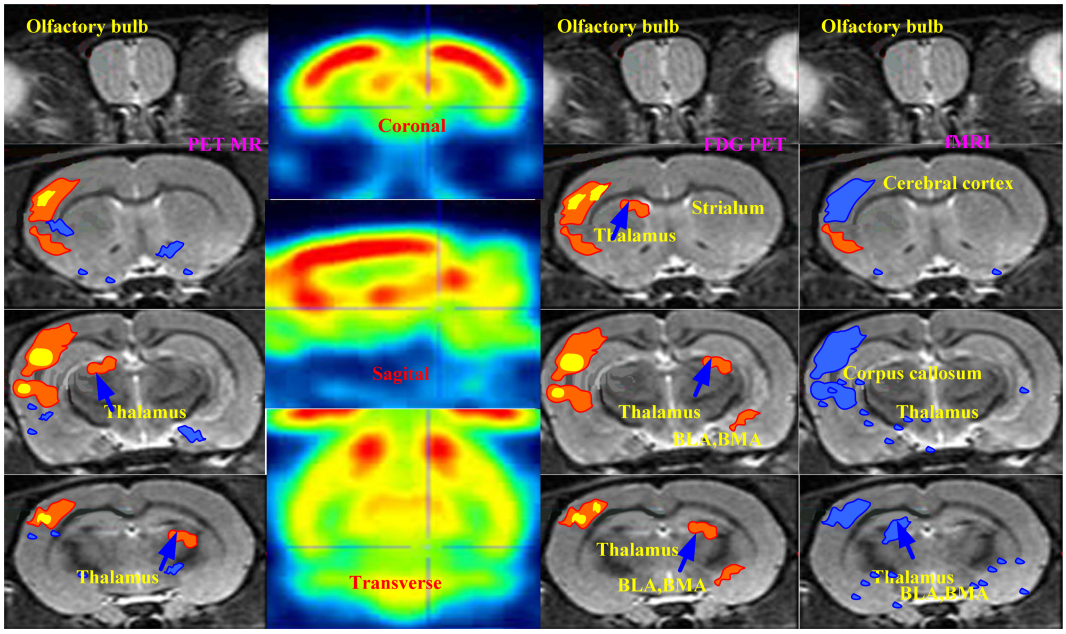

Fig. 4. (Color online) MRI-^{18}F-FDG, Induction of global ischemia through common carotid artery occlusion after induction of anesthesia.

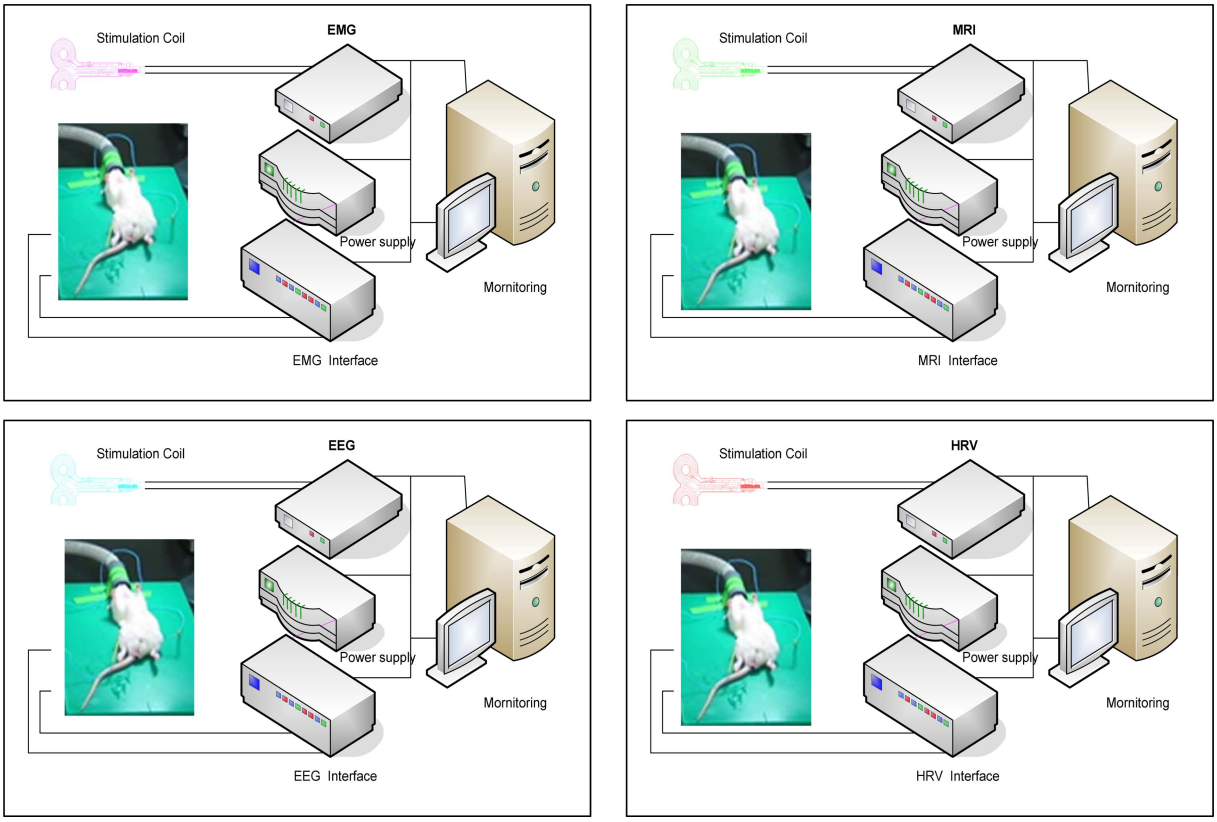

Fig. 5. (Color online) We show how to implement the various experiments.

centrifuging at 1,000 rpm, it was washed twice with 2.2 ml of cold PBS. For the amount of protein, the absorbance was measured at 750 nm using a Protein assay kit (Bio-rad). After making the amount of protein the same by mixing the lysis buffer and sample buffer in the protein, it was boiled for 7 minutes at 24°C heat block

and the samples were collected by centrifuging it. After making a separating gel by mixing the 30% polyacrylamide mix and 3rd distilled water, 1.5 M tris (pH 8.8), 10% SDS, 10% ammonium persulfate, TEMED, gel was solidified on electrophoresis glass assembled by washing. The gel was formed on separating gel by mixing Stacking gel and 3rd distilled water, 1 M tris (pH 6.8), 10% SDS, 10% ammonium persulfate, TEMED. The electrophoresis running buffer made a 10× stock by melting a tris base 20.0 g, glycine 100 g, SDS 20 g in 1ℓ. 10-30 μl of protein was added and shed for approximately 2 hours at 110 V. The electrophoresed gel was transferred to a nitrocellulose membrane for 2 hours at 110 V. The composition of the transfer buffer was used to make a tris-base 5.03 g glycine 17.63 g, methanol 300 ml in 1ℓ. A thin membrane was maintained in 6% skim milk at 5°C after washing it with a TTBS (pH 8.5) solution created with tween 30, triple distilled water, 200 mM tris-base, and 2.54 M NaCl. After putting a thin membrane in solution made by diluting the same primary antibody as the antibody used in immuno-staining 1000 times with 6% skim milk and reacting it for 1 hour, it was washed 5 times with a TTBS solution for 10 minutes and the 2nd antibody was diluted 1000 times with 6% skim milk and induced for 1 hour by placing it in a thin membrane. After removing the solution, it was washed with TTBS 3 times for 10 minutes. After ECL kit solutions A and B were wetted by 50:1 on a thin membrane and reacted for 3 minutes, a thin membrane was placed on the cassette and exposed to light by X-ray film. This was fixed after being exposed to light, expressed and checking the band. The optical density of each band was measured with Bio-rad by scanning after drying.

2.4. Data Analysis

All the collected data was analyzed by a statistical treatment Program (SPSS 12.0K/PC) after coding. After inducing apoplexy, the analysis between the treatment groups was carried out. ANOVA analysis was conducted to examine the treatment effects. The significance level was set to $\alpha=0.05$.

3. Experimental Results

The power device could control the output of the transcranial magnetic stimulation device by varying the pulse repetition rate in a constant pulse width. The repetition rate was designed to vary up to 5-60 Hz and the maximum pulse voltage that could be obtained in power was approximately 2 kV. AC voltage (220 V) of the same-phase. The voltage permitted in the Switching part was reduced through a small transformer. The signal that went through the differentiator and amplifier at the point where the voltage was permitted in the base of transistor Tr1 after going through the diode and resistance, and was permitted in the base of Tr1 becomes 0 generated a 5 V square wave pulse with an approximately 500 μs pulse width at the T2 collect. For the phase angle, the firing angle of the Triac compared with the command signal was determined and the pulse type was made to trigger the Triac at the arithmetic value. The pulse method to directly trigger the phase angle made inside the AVR-Chip to SCR has a very simple circuit and could have features, such as reliability improvement, noise of the power voltage, aged deterioration, temperature characteristics as well as linear control, simple and the features of an existing analog method. Figure 3 shows the input and output signal of the ZCS in accordance with the commercial power in the entire circuit and operation waveforms of the Triac signal and transformer primary side waveforms. Triac was used as the switching element to switching the voltage from AC, and a high pressure leakage transformer for neon trans (1st: 220 V, 2nd: 5 kV) was used to transform the switched low-pressure pulse and permit in the discharge tube. In particular, the Zero Cross Detector circuit senses the zero voltage of the exchange line and then transfers information to the AVR one chip micro process. 60 pulses per second were generated at zero voltage of the AC line of AVR 182 (Zero Cross Detector) Chip circuit. Fig. 6, The input and output signal of the ZCS in accordance with the commercial power in the entire circuit and operation waveforms of the Triac signal and transformer primary side waveforms. AVR-One- chip- Microprocessor of Figure 6 shows the transcranial magnetic stimulation output voltage by controlling the

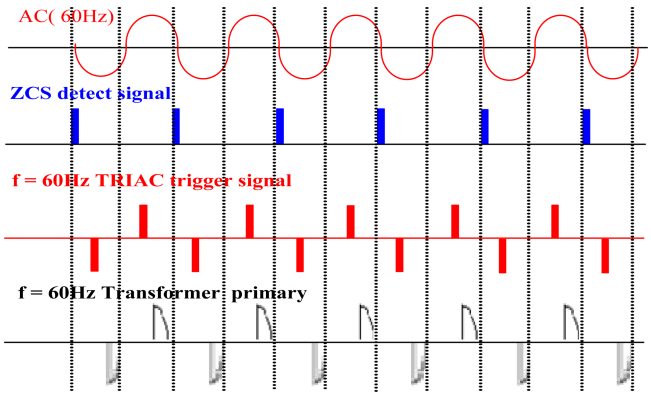

Fig. 6. (Color online) The input and output signal of the ZCS in accordance with the commercial power in the entire circuit and operation waveforms of the Triac signal and transformer primary side waveforms.

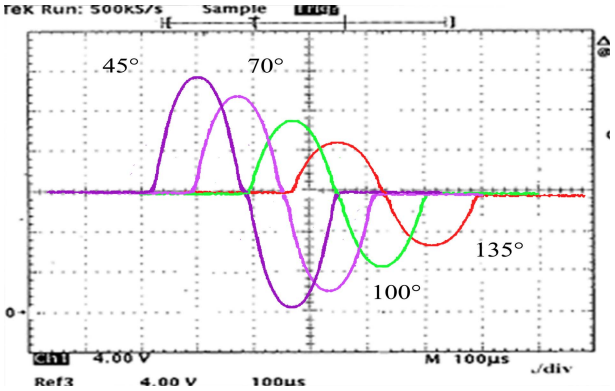

Fig. 7. (Color online) Shows the transcranial magnetic stimulation output voltage by controlling the trigger angle of the Triac from 45° to 135° to trigger the impact of the initial value of the input voltage.

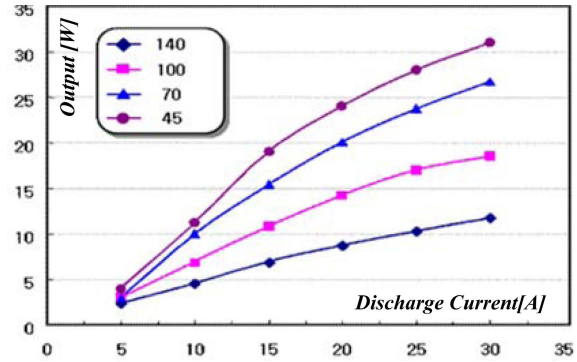

Fig. 8. (Color online) Output relationship according to the radius depending on the discharge current.

trigger angle of the Triac from 45° to 135° to trigger the impact of the initial value of the input voltage. Fig. 7, Shows the transcranial magnetic stimulation output voltage by controlling the trigger angle of the Triac from 45° to 135° to trigger the impact of the initial value of the input voltage. Fig. 8, Output relationship according to the radius depending on the discharge current. The number of rat cerebral Poly ADP-ribose polymerase response cells after inducing ischemia in a clinical trial was examined 12 hours after inducing ischemia and figure shows the AC-TMS photos under the same conditions. As shown in the pictures above, the number of PARP response cells at 12 hours after ischemia induction was 76.33±9.61, 91.67 ±15.27 and 113.00±4.00 in the control, ischemia and AC-TMS group, respectively. Fig, Output relationship according to the radius depending on the discharge current. Output relationship according to the radius depending on the pressure. In figure, The number of Poly ADP-ribose polymerase response cells after 6 to 40 hours was 77.00 ± 3.61, 205.67±30.66 and 134.67±15.53 in the control, ischemia and AC-TMS group, respectively; the AC-TMS group showed a significant decrease ($p<0.05$) compared to the ischemia group. The number of Poly ADP-ribose polymerase response cells of the ischemia group 18 hours after ischemia induction was 105.67±14.98, and there was a drastic decrease compared to that at 24 hours, and the number of response cells in the AC-TMS group was reduced to 105.67±22.72. Fig. 9, C c-fos reaction in the forebrain. Effect of transcranial magnetic stimulation on

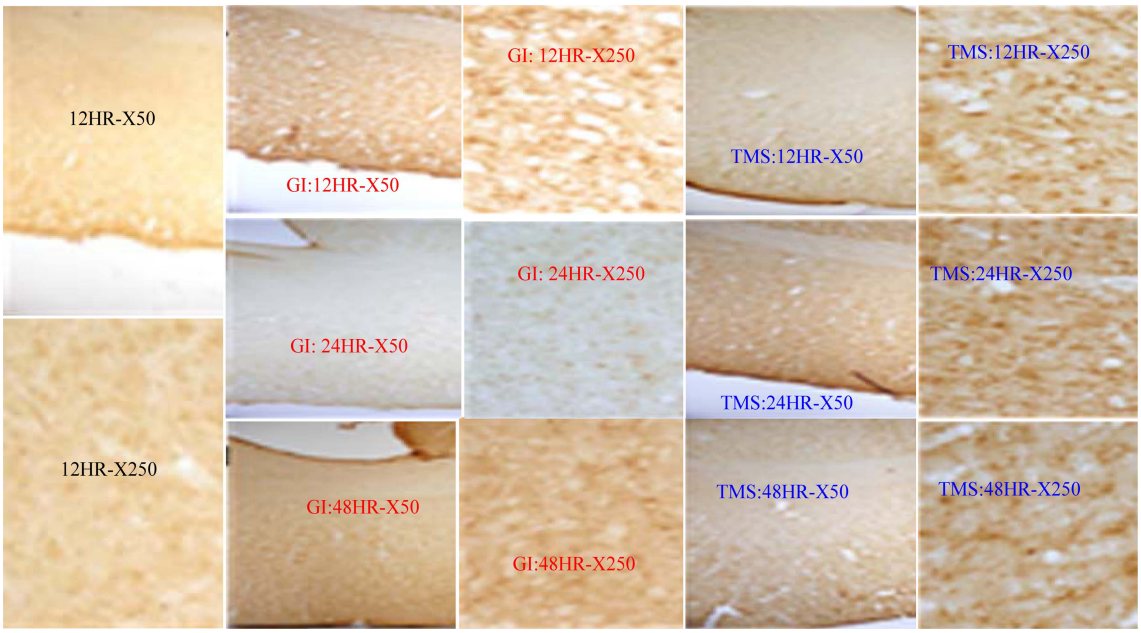

Fig. 9. (Color online) C c-fos reaction in the forebrain.

Table 1. C fos reactive cells in each group

Croup	Cell response		
	12 h	24 h	48 h
Control	35.00 ± 7.00		
GI	109.33 ± 15.31	175.00 ± 24.27	38.67 ± 13.50
TMS	96.00 ± 12.77	146.33 ± 16.04	95.33 ± 6.51

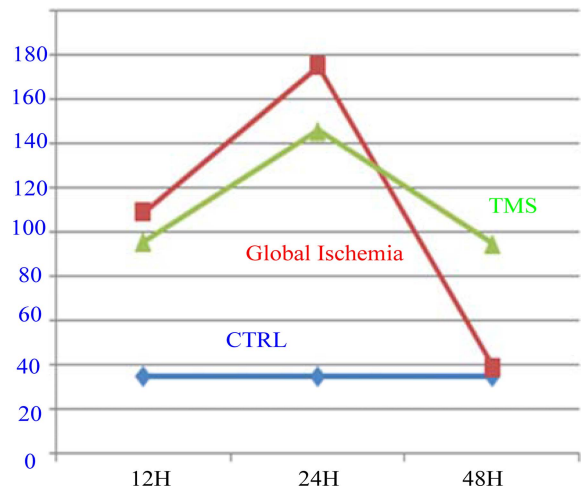

Fig. 10. (Color online) Comparison of c-fos reactive cells in each group.

PARP immunore active cells in rat cerebrum after transient global ischemia. (a) Control=no surgical procedure (X 50), (b) Control=no surgical procedure (X 250), (c) GI=12h after transient global ischemia (X 50), (d) GI=12h after transient global ischemia (X 250), (e) GI=24h after transient global ischemia (X 50), (f) GI=24h after transient global ischemia (X 250), (g) GI=48h after transient global ischemia (X 50), (h) GI=48h after transient global ischemia (X 250), (i) TMS=transcranial magnetic stimulation at 12 h after transient global ischemia (X 50), (j) TMS=transcranial magnetic stimulation at 12 h after transient global ischemia (X 250), (k) TMSS=transcranial magnetic stimulation at 24 h after transient global ischemia (X 50), (l) TMS=transcranial magnetic stimulation at 24 h after transient global ischemia (X 250), (m) TMS=transcranial magnetic stimulation at 48 h after transient global ischemia (X 50), (n) TMS=transcranial magnetic stimulation at 48 h after transient global ischemia (X 250). Fig. 10, Comparison of c-fos reactive cells in each group.

4. Conclusion

The TMS treatment has a special effect in improving the symptoms of cerebrovascular accidents including ischemia. This effect of TMS is being used to improve the functional recovery from a range of disorders including apoplexy. One of the most powerful effects of AC-TMS treatment was reported to recover quickly from the complications of apoplexy. When ischemia is breaking out, the extensive activation of Poly ADP-ribose polymerase occurs and the effect of PARP clearly shows over activation in necrotic cell death and becomes the cause of the pathological process of Cell death. The cerebral infarction volume induced by a temporary or permanent middle cerebral artery occlusion can be reduced by applying 3-aminobenzamide, which is used widely as Poly ADP-ribose polymerase suppressant. Poly ADP-ribose polymerase suppressant was also used as a protectant from the neurotoxicity caused by NO and hydrogen peroxide. For the effect of AC-TMS on the cerebrum part, the number of Poly ADP-ribose polymerase response cells was reduced significantly ($p<0.05$) in the AC-TMS group compared to the ischemia group in 18 hours after ischemia induction. Poly ADP-ribose polymerase expression was reduced significantly ($p<0.06$) in the AC-TMS group compared to the ischemia group after 22 hours. Both Bax, Caspase-3 and C-fos immune response cells related to apoptosis were observed more in the ischemia group than in the AC-TMS group. In the ischemia group, the amount of Bax increased the most in I group (12hr), and Caspase-3 and C-fos increased the most in II group (24hr). AC-TMS produced increased inhibition of these factors in the ischemia group. As a result, the Poly ADP-ribose polymerase immune response cells related to necrosis showed the greatest AC-TMS effect 24 hours after ischemia, indicating that AC-TMS suppresses necrosis. AC-TMS stimulation has the nerve cell protection action of blocking nerve cell death by reducing the protein Poly ADP-ribose polymerase related to cell death after ischemia with AC-TMS stimulation. Therefore, this study showed that the function of brain cells can be recovered, and the disorder can be improved by applying AC-TMS stimulation when brain damage occurs due to ischemia.

Acknowledgement

This research was supported by Kyung sung University Research Grants in 2014.

References

[1] V. Walsh, A. Pascual-Leone, Transcranial magnetic stimulation: a neurochronometrics of mind, The MIT Press, Cambridge (2005).
[2] E. Wassermann, Oxford handbook of Transcranial Stim-

ulation, Oxford University Press, Oxford (2007).
[3] S.-S. Choi, Biomedical Engineering: Applications, Basis and Communications **24**, (2013).
[4] Richard S. J. Frackowiak, John T. Ashburner, William D. Penny, SemirZeki, Karl J. Friston, Christopher D. Frith, Raymond J. Dolan, and Cathy J. Price, Human Brain-Function, Second Edition, Academic Press, San Diego (2004).
[5] S.-S. Choi, Journal of Biomedicine and Biotechnology 278062, (2011).
[6] Orrin Devinsky, Aleksandar Beric, and Michael Dogali, Electrical and Magnetic Stimulation of the Brain and Spinal Cord (1993).
[7] C. Edward Coffey and Jeffrey L. Cummings, The American Psychiatric Publishing Textbook of Geriatric Neuropsychiatry, Americna Psychiatric Press (2011).
[8] N. A. Lazar, The Statiscal Analysis of Functional MRI Data. Springer (2008).
[9] S. S. Choi, J. Magn. **16**, 246 (2011).
[10] M. Sommer, N. Lang, F. Tergau, and W. Paulus, Neuroreport **13**, 809 (2002).