ISSN (Print) 1226-1750
ISSN (Online) 2233-6656
Journal of Magnetics 24(2), 314-321 (2019) https://doi.org/10.4283/JMAG.2019.24.2.314

Transcranial Magnetic Stimulation on the Occurrence of BAX in Cerebellum of a Rat with Trasient Global Ischemia

Han-Ho Tac[1], Jun-Il Kim[2], Jun-Hyeung Kim[2], and Whi-Young Kim[3]*

[1]*Department of Electronic engineering, Gyeongnam National University of Science and Technology*
[2]*Department of Free Nursing, Pierce College Fort Steilacom 9401 Farwest Drive SW Lakewood, Washington 98498, USA*
[3]*Department of Biomedical Engineering, Dongju College University, Busan 49318, Republic of Korea*

(Received 26 February 2019, Received in final form 18 June 2019, Accepted 18 June 2019)

There are quick temporary changes on brain cortex on Bax, c-Fos mRNA, and protein after brain damage and c-Fos is related to biological factors such as cell cycle process and tumorigenesis. After ischemic damage, c-Fos quickly causes initial gene and transcription factor on CA1 area, and continuous inducing of c-Fos cause apoptosis after ischemic damage. In this study, LC series resonant boost converter is used on a magnetic stimulation device. Transcranial Magnetic Stimulation (TMS) was used to determine effects of Magnetic stimulation on Bax, Caspase-3, immunoreactive cell on 12 and 24 hours ischemia induced with apoptosis on ischemia. To control the experimental device, EICS affiliate AE32000C Processor Core was used. After magnetic stimulation with TMS device on an ischemia mouse, we determined effects of magnetic stimulation on Bax and c-Fos on cerebellum. We want to identify a more positive approach to apoptosis caused by early ischemic brain injury than electrotherapy by examining c-Fos protein changed large brain neuron after stimulating ST 36 on an ischemic mouse's brain.

Keywords : AE32000C, transcranial magnetic stimulation, BAX, global, ischemia

1. Introduction

Neurons died when ischemia occurred, by blocking oxygen supply, exhausting ATP in mitochondria, and anaerobic metabolism [1, 2]. Hypoxic-ischemic brain injury leads not only to cerebral cell damage but also inflammatory response that includes accumulation of macrophage [3, 4]. Macrophage accumulated at periphery 2-3 days after injury. Caspase 9 is an apoptosis leader by active chain responding of other caspases. Caspase 1, 4, 5, 11, 12, 13, and 14 Group 1 usually play roles of cytokine processors, and caspases 2, 8, 9, and 10 Group 3 are pass signal delivery system as initiator caspases.

Cytokine is one of the biochemical secretions from acute brain damage [5-7]. It controls inflammation and process of revival, and especially one of the cytokine, IL-6, is involved in metabolism and dioxygenation in serious brain damage [8]. IL-6 is produced by astrocyte and microglia, and plays a significant role in collagen producing, endothelial function activating, angiopoiesis, astrocyte increase, and recovery of brain edema [9]. After ischemic damage, c-Fos quickly leads initial gene and transcription factor, and continuous inducing of c-fos boost neuronal death [11, 12]. In this study, application of stimulation and find the effect of it on apoptosis related Bax [10], Caspase-3, and immunore active cell in the condition of ischemia, on 12 and 24 hours ischemia induced [7]. We investigated effects of the magnetic stimulation on the revelation of c-Fos in the ischemic mouse using multi-resonant analysis [5]. We wanted to find a more assertive approach than electrotherapy for early ischemic-brain-damage apoptosis by examining c-Fos changes after magnetic stimulation on the ST 36 [7]. Fig. 1 64-Bit-EISC Processor-Core microprocessor to control and operate the energy storing condenser recharging method that employs a two-stem type converter.

2. Methods

2.1. AE32000C Processor Core

EISC architecture based embedded system include JTAG interface, and GDB program translate user command to

©The Korean Magnetics Society. All rights reserved.
*Corresponding author: Tel: +82-51-200-3449
Fax: +82-51-200-3449, e-mail: neurondyag@gmail.com

© 2019 Journal of Magnetics

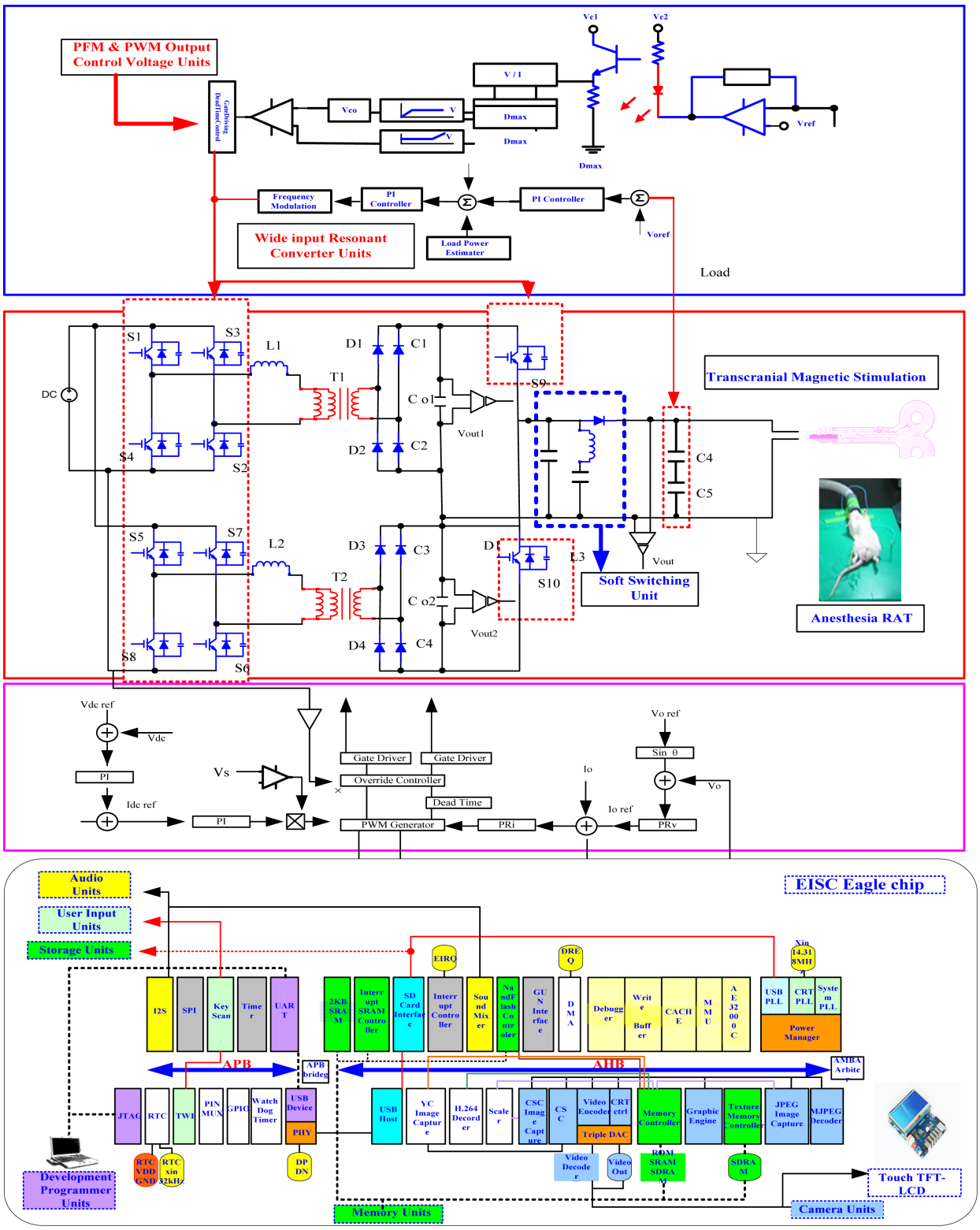

Fig. 1. (Color online) 64-Bit-EISC Processor-Core microprocessor to control and operate the energy storing condenser recharging method that employs a two-stem type converter.

packet form and send it to JTAG module through USB interface. The JTAG module analyzes the packet received from GDB and converts it into a Test Data Input (TDI) packet and transmits it to the EISC target board through

JTAG. After execution of the TDI command, the target board constructs the execution result as a TDO (Test Data Output) packet and transmits it to the JTAG module via JTAG. The JTAG module changes resulting data to GDB-parsable packet and transmits it via USB.

The debugging command entered by the user is reconstructed in packet form in GDB, and the packet is transmitted outside via predetermined communication method. To use the USB-JTAG interface, GDB loads the USB device library. USB The device library is implemented as a DLL (Dynamic Link Library) and includes a USB I/O function. GDB sets the communication method with EISC processor to USB-JTAG, loads USB device library, and establishes USB connection through Open Device function.

When it is possible to communicate between GDB and EISC processor via USB, all packets in GDB are sent/received via Read/Write function.usb_remote. The structure contains a function for the remote communication structure (remote_ops) provided by GDB and a function for using USB interface. Using the USB interface, the usb_remote_open function is executed when communication is established with the EISC processor. The USB function Open Device is used as Open Device in GDB, the Write function as Write USB, Read as Read USB, and Close as Close USB. The EISC processor can read or write values of up to 10 consecutive registers through JTAG.

2.2. Experimental mammals

Seven male SD mice of an approximate weight of 300 g and age of 8 weeks adjusted to laboratory environment for more than one week and specific-pathogen-free (SPF) experimental mammals were used. Moderate temperature, humidity, air conditioning, food, and water were provided; the laboratory temperature was fixed as 22.1 °C, and humidity was maintained between 45-55 percent. Fig. 2 Induction of global ischemia through common carotid artery occlusion after induction of anesthesia.

2.3. Ischemia-causing model and magnetic-stimulation device

The experimental mammals were placed under anesthesia with 3 percent isoflurane1, and a 2-cm incision was made at both sides of the common carotid arteries while the vagus nerve was isolated. Common carotid arteries were exposed, and a suture was maintained using a non-absorbable suture for 5 minutes. Next, the suture was removed to facilitate blood reperfusion [6].

The mice were divided into three groups. Closure of common carotid arteries was not implemented for the control group, and the experimental groups are the global ischemia (GI) group for which common-carotid arteries were closed and the TMS group that received post-GI magnetic stimulation. The study was conducted with two mice in each group. After 12, 24, and 48 hours, the GI group recovered from anesthesia with 3 percent isofluranne, and magnetic stimulation was applied to the left

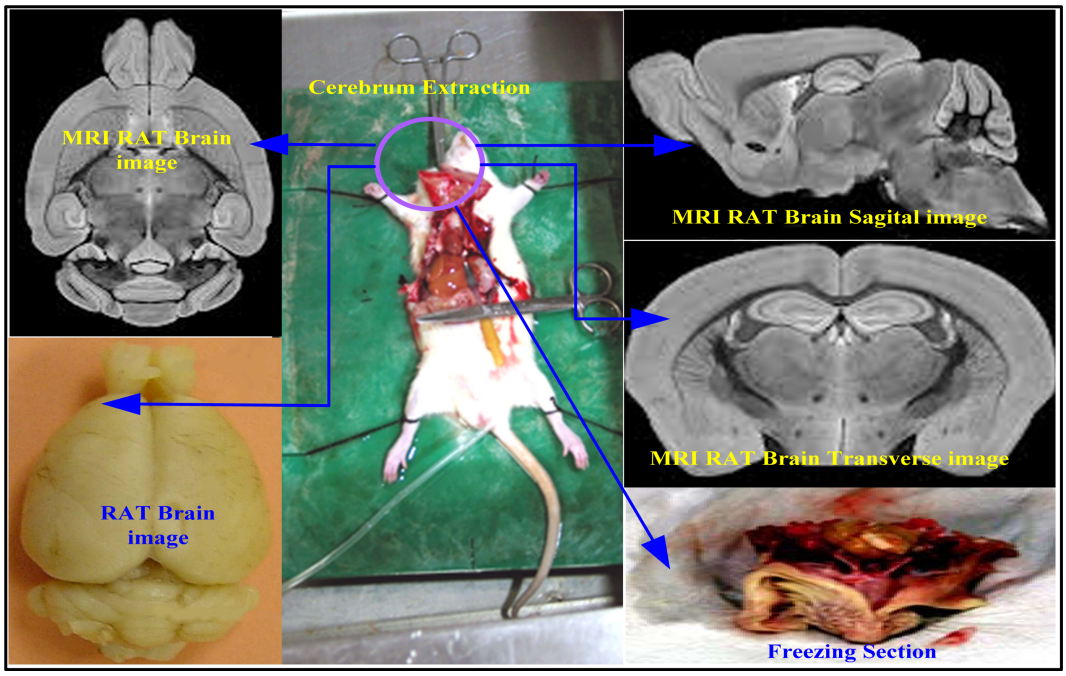

Fig. 2. (Color online) Induction of global ischemia through common carotid artery occlusion after induction of anesthesia.

and right acupuncture points of the TMS group with 3 percent-isoflurane anesthetic. Magnetic stimulation was conducted using 10 Hz, and intensity was controlled during muscle movement around stimulated points.

2.4. Converter

Single switch using LC series resonant boost converter circuit was used. Mode 1) In the condition of switch turn-on, current of main inductor L flowed through resonant circuit. Mode 2) Resonant capacitor Cr was fully charged, and current direction of resonant circuit was changed. Mode 3) Main inductor current and resonant circuit current are flow through switch. Mode 4) When snubber capacitor Cs voltage become same with output voltage Vout, output diode Dout became electricity flows. Mode 5) when all charged energy in resonant circuit was used, current direction of resonant inductor Lr was changed. Mode 6) Resonant inductor Lr current became bigger than the main inductor L current, and snubber capacitor Cs were discharged. Mode 7) snubber capacitor Cs voltage become 0, and resonant circuit form a current route with switch anti parallel diode.

Switch become zero potential condition, and by turning-on the switch at this point, switching ZVS. To protect hardware, software block PWM signal primary if current is above 12A, and if it fails at first trial, hardware block PWM on 15A. In designing resonant element, use resonant without auxiliary switch, and realize zero-voltage switching if switch turn-on and turn-off, consider resonant condition is critical to realize exact zero-voltage switching. If resonant inductor current is larger than main inductor current, the difference of current discharge snubber capacitor and make zero-voltage condition in the condition of switch-off. To content resonant condition, range of resonant inductor current has to be bigger than main inductors, and maximum resonant inductor current

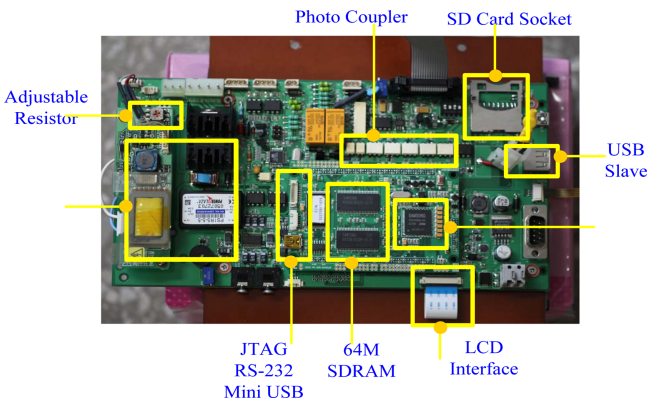

Fig. 3. (Color online) EISC chip control and drive circuit.

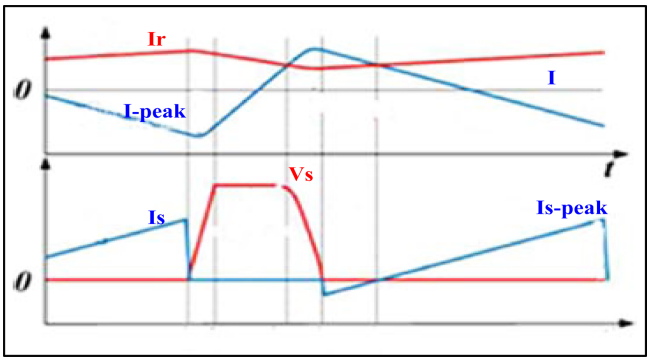

Fig. 4. (Color online) EISC Processor-Core microprocessor to control and operate the energy storing condenser recharging method that employs a converter.

has to be larger than main inductors. Resonant capacitor capacity is set large enough to reduce voltage regulation, and switching frequency is set 2.5 times faster than resonant inductor and resonant capacitor's series resonant frequency. When snubber capacitor becomes larger, current on resonant inductor should be larger to make switch zero-voltage right before turn-on. Fig. 3 EISC chip control and drive circuit.

Fig. 4 EISC Processor-Core microprocessor to control and operate the energy storing condenser recharging method that employs a converter.

2.5. Immunohistochemistry

Immunohistochemistry was operated using the fore-brain of the closed common carotid arteries of a GI-model mouse. The fixed brain was frozen sectioned in 6 percent paraformaldehyde using the free-floating method for which the Vectastain ABC Kit3 was used. Cut tissue was placed under room temperature for 30 minutes with 5 percent of normal goat serum after a 5-minute flushing was applied three times with a 0.1 M PBS and a blocking was applied with 1 percent H_2O_2 (peroxidase blocking, 0.1 M PBS).

The anti-c-Fos was used as the primary antibody after reaction three times flushing with the 0.1 M PBS for 5 minutes each time that were conducted over three days. The secondary antibody was reacted for three days using the three-times flushing process; it was then flushed three times for 5 minutes each time with the 0.1 M PBS. Avidin-biotin-peroxidase (ABP) complex reacted at room temperature for 3 hours, and was flushed three times for 5 minutes. After the DAB4 antibody was developed, the tissue was dried with a 1 percent gelatin solution for three hours in a dryer, and it was placed into Permount-5 solution after drying and transparency process.

2.6. Western blotting

The categories delivered the cerebrum as a part and it was fragmentized with a homogenizer. Then, centrifugation at 1,000 rpm was used, and it was washed with 2 ml of cold PBS without a supernatant. After centrifugation, only the supernatant was obtained. To determine amount of protein, a protein assay kit (Bio-Rad, USA) was used, and the absorbance was determined at 750 nm.

Lysis and sample buffers (60 mM tris, pH 6.8, 10 percent glycerol, 2 percent SDS, .01 percent bromophenol blue) were added on the quantitative protein, boiled in a 100°C heat block for 5 minutes, and followed centrifugation using the same amount of mixed protein with each buffer. Then, 30 percent polyacrylamidemix, one third of distilled water, 1.5 M tris (pH 8.8), 10 percent sodium dodecyl sulfate (SDS), 10 percent ammonium persulfate that was made on the day, and tetramethylethylenediamine (TEMED) were mixed to make a separating gel (12-15 percent) that was poured onto clean electrophoresis glass for solidification. An electrophoresis running buffer was then made with 30.0 g of a melted tris base, 144 g of glycine, and 10 g of the SDS on 1 ℓ to make 20× stock. The quantitative protein had to be stimulated with 10-20 μl and 100 V for one hour. Electrophoresis gel was then transferred onto a nitrocellulose membrane with 100 V for one hour. A sliced membrane was washed with tri-buffered saline solution (pH 7.5) that was made using 200 mM of a tris base, 1.54 M sodium chloride (NaCl), one third of distilled water, and Tween 20, and it was stored in 5 °C with 5 percent skim milk. After removal of the blocking solution, the thin membrane of the primary antibody reacted with a 1,000-times-diluted 5 percent skim-milk solution for one hour, and it was washed three times with the TBS solution for 10 minutes each time. The thin membrane of the second antibody reacted with 1,000-times-diluted 4 percent skim-milk solution for one hour, and it was washed three times with the TBS solution for 10 minutes each time. Mix ECL A and ECL B solution with 40:1 ratio and put membrane in it for one minute and expose with X-ray film.

3. Results

The hippocampus is a part of the temporal lobe, and consists of a part of the lateral ventricle.

The efferent connection is through the formix, a bundle of fluid nerve fibers composed of numerous axons. This is originated from the hippocampus and hippocampal cells of the hippocampus and is connected to the papillary body of hypothalamus. The circuit of the nerve fibers that connect the hippocampal formation - the cerebral ganglia - the papillary body - the sagittal nucleus - the sagittal sinus - the inner olfactory cortex is called the Pappetz circuit, that is the central circuit that acts on memory.

Several major mechanisms in nerve cell damage have been reported, including excitotoxic action, free radical stress and apoptosis. Increased activity of Caspase-3 after transient ischemia was observed at the site of neuronal injury, that is significant evidence of apoptosis When an ischemic stroke occurs in the hippocampus, it causes memory and cognitive impairment mentioned above. To

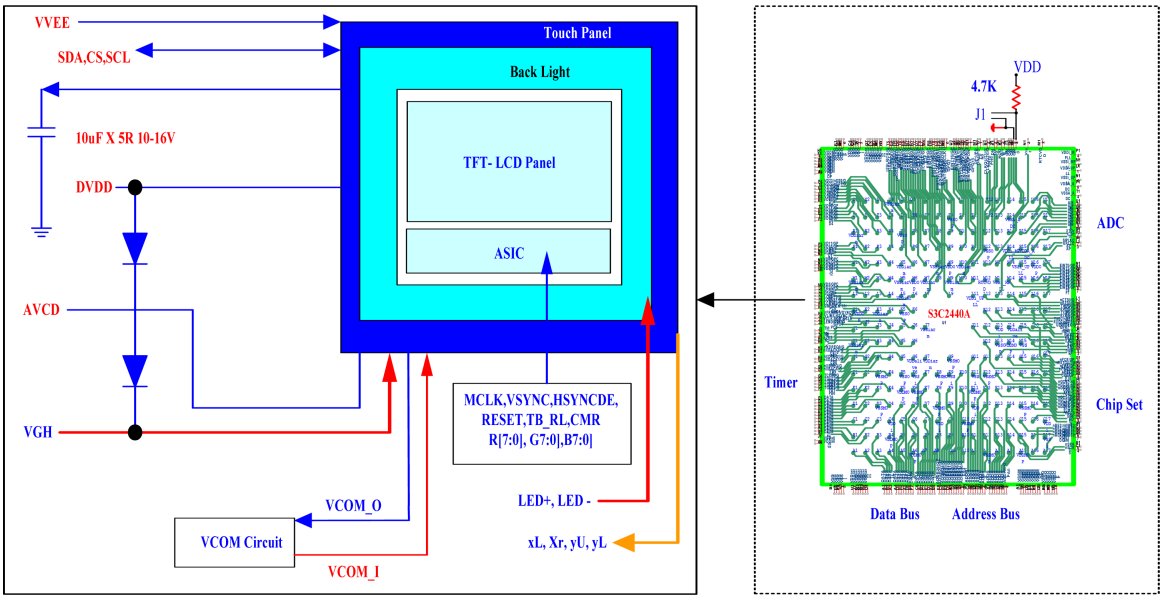

Fig. 5. (Color online) Experimental Converter Waveforms for TMS (peak value).

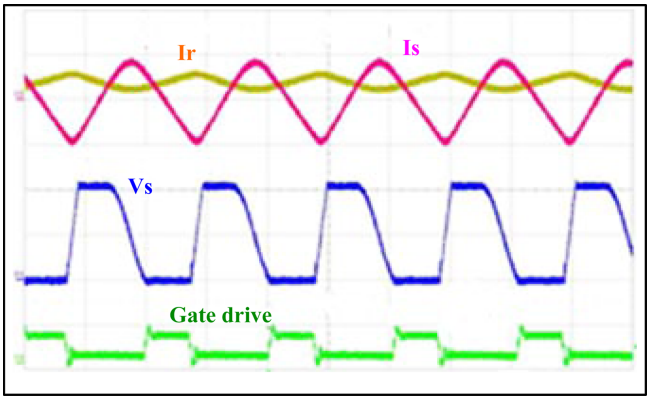

Fig. 6. (Color online) Experimental Converter Waveforms for TMS (Current waveform flowing through the transformer primary Ir, Is and voltage of the resonant capacitor Vs, gate dr).

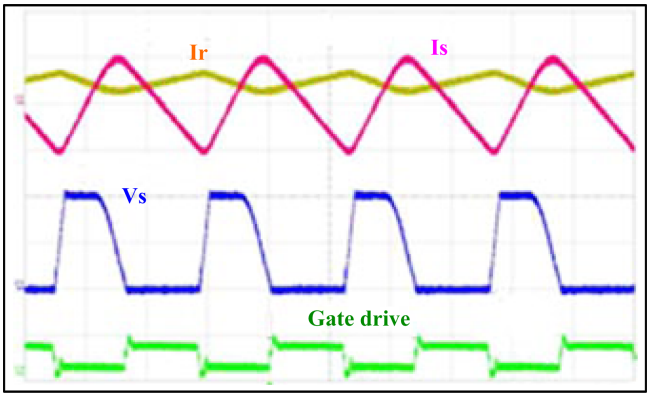

Fig. 7. (Color online) Experimental Converter Waveforms for TMS (Current waveform flowing through the transformer primaryIr, Is and voltage of the resonant capacitor Vs, gate dr).

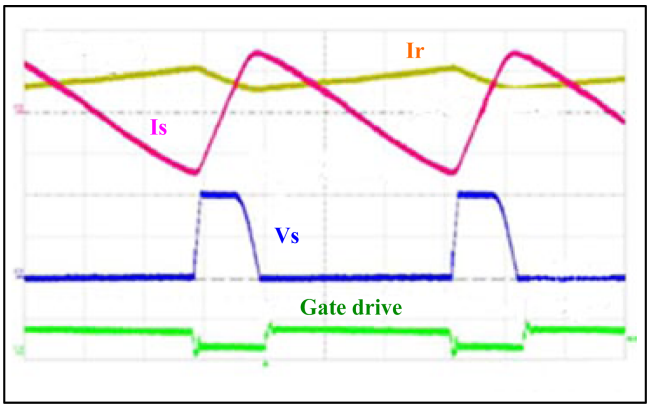

Fig. 8. (Color online) Experimental Converter Waveforms for TMS (Current waveform flowing through the transformer primary and voltage of the resonant capacitor Vs and gate dr).

minimize this disorder, rehabilitation is needed after injury. Magnetic stimulation devices may be highlighted among these rehabilitation treatments.

Purkinje cells in the cerebral cortex, hippocampus, and cerebellum are sensitive to ischemic injury among neurons. In a study of neuronal damage observed in transient cerebral ischemia of rats, morphological changes of cells were observed on the brain, revealing selective vulnerability that varies according to the site, not to a similar degree. Hippocampus and neocortex are fragile, especially hippocampus. Transient global ischemia increases the number of c-fos, TUNEL and caspase-3 positive cells in the hippocampal CA1 region. Fig. 5 Experimental Converter Waveforms for TMS (peak value). Fig. 6 Experimental Converter Waveforms for TMS(Current waveform

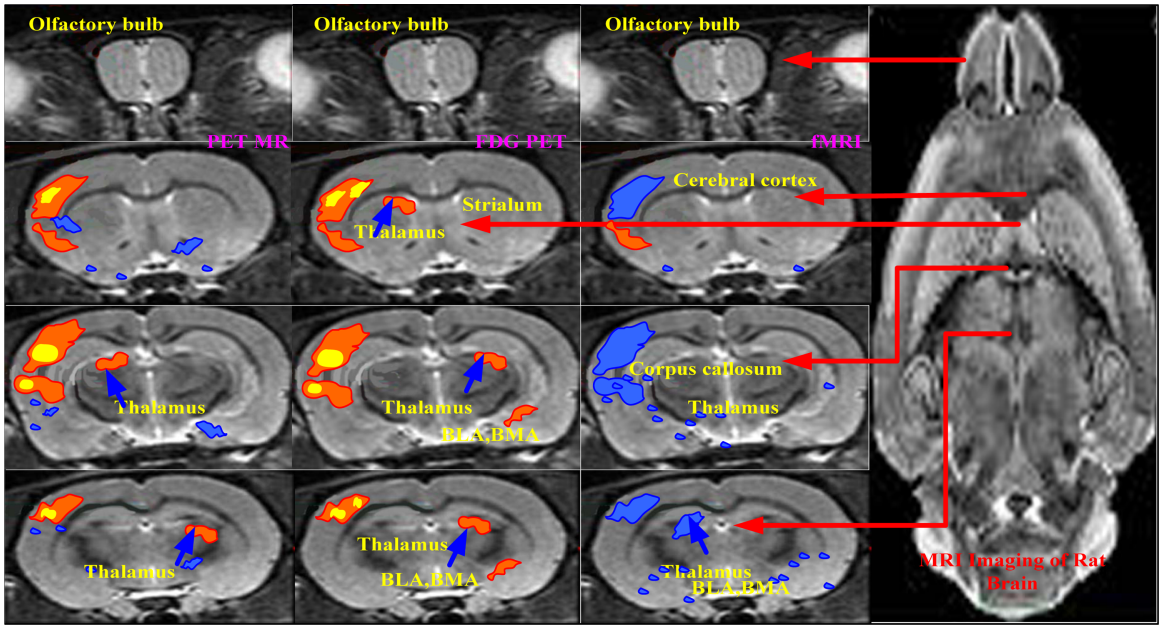

Fig. 9. (Color online) MRI, 18 F-FECT, 11C-RAC, 18F-FDG through common carotid artery occlusion after induction of anesthesia.

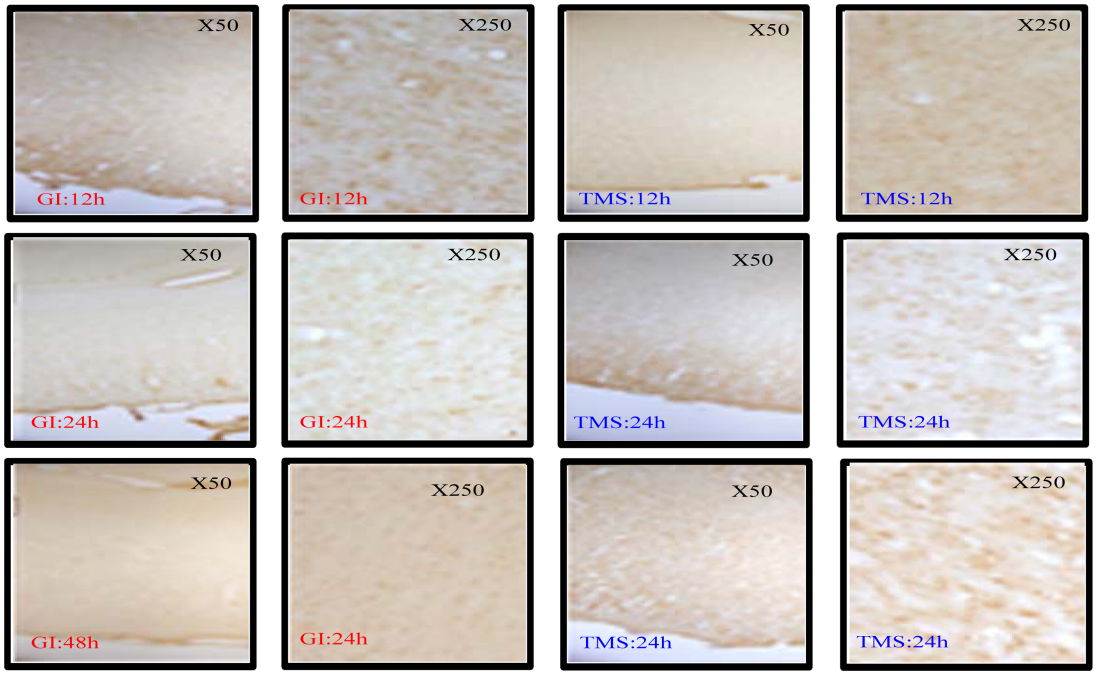

Fig. 10. (Color online) Reaction in the forebrain.

flowing through the transformer primary Ir, Is and voltage of the resonant capacitor Vs,gate dr). Fig. 7 Experimental Converter Waveforms for TMS (Current waveform flowing through the transformer primaryIr, Is and voltage of the resonant capacitor Vs, gate dr). Fig. 8 Experimental Converter Waveforms for TMS (Current waveform flowing through the transformer primary and voltage of the resonant capacitor Vs and gate dr).

4. Discussion

Increased induction of c-fos gene by transient ischemic preconditioning is an important phenomenon that validates the mechanism by which c-fos protein causes apoptosis. Magnetic stimulation therapy inhibited increases in the number of C-fos, TUNEL and Caspase-3 positive cells in the ischemic hippocampal CA1 region, the strongest inhibitory effect that were observed in ST-16, did not affect a number of these cells. It has been reported that magnetic stimulation is used to enhance functional recovery from various disorders. Fig. 9 MRI, 18 F-FECT, 11C-RAC,18F-FDG through common carotid artery occlusion after induction of anesthesia.

In a study of the effect of acupuncture on gerbils' hippocampus and new cell proliferation after transient ischemic preconditioning, magnetic stimulation inhibited apoptosis and new cell proliferation by about 70 percent. These results led to the therapeutic effect of magnetic stimulation therapy to ameliorate ischemic-induced apoptosis

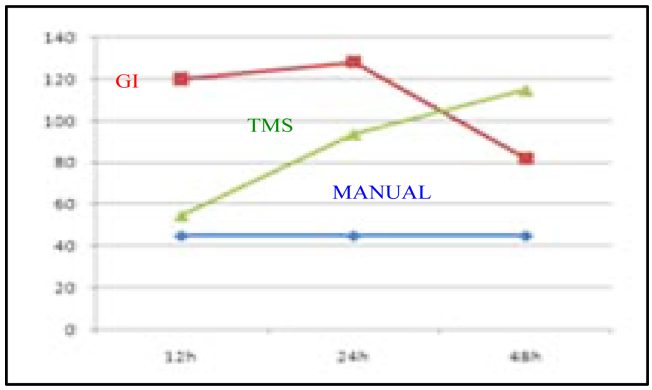

Fig. 11. (Color online) Comparison of c-Fos reactive cells in each group.

and restore ischemic brain damage. Fig. 10 reaction in the forebrain Fig. 11 Comparison of c-Fos reactive cells in each group.

Magnetic stimulation therapy is a neuroprotective effect of ischemia through two processes: secretion of glutamate and inhibition of reperfusion injury. Magnetic stimulation allows induction of c-fos protein such as immune response in neurons of various parts of the hippocampus, especially CA1, after transient ischemic preconditioning, and at the same time, magnetic stimulation induces most CA1 cells from delayed degeneration after ischemia. These results indicate that magnetic stimulation protects hippocampal neurons after cerebral ischemia, and c-fos is associated with this process.

In brain ischemic injury, IL-6 changes in brain tissue to a degree corresponding to the size of the infarct, indicating that local effects of hypoxia are also related to the range of brain damage. IL-6 levels in cerebrospinal fluid and plasma were predictive of functional recovery and consistent with infarct size. IL-6 mRNA is thought to be up-regulated after central nervous system ischemia.

5. Conclusion

In this study, we investigated effects of magnetic stimulation and low-frequency stimulation on the hippocampus after ischemia-induced hippocampal neoplasia after closing and reperfusion of the common carotid artery in the rat. The Caspase-3, IL -6, c-Fos, and PARP, and the following conclusions were obtained. Magnetic stimulation is effective in inhibiting neuronal cell destruction and inflammation induction in the hippocampus after ischemic stroke. Application of magnetic stimulation is expected to enable recovery of memory after brain injury. Magnetic stimulation was effective in relatively early stages after ischemic brain injury.

Acknowledgement

"This work was supported by Gyeongnam National University of Science and Technology Grant 2019".

References

[1] V. Walsh and A. Pascual-Leone, Transcranial magnetic stimulation: a neurochronometrics of mind. Cambridge, MA: MIT Press (2005).
[2] W. Y. Kim, J. Magn. **19**, 197 (2014).
[3] E. Wassermann, Oxford handbook of Transcranial Stimulation, Oxford University Press, Oxford (2007).
[4] C. Edward Coffey and Jeffrey L. Cummings, The American Psychiatric Publishing Textbook of Geriatric Neuropsychiatry, Americna Psychiatric Press (2011).
[5] M. Sommer, N. Lang, F. Tergau, and W. Paulus, Neuroreport **13**, 809 (2002).
[6] S.-S. Choi, Journal of Biomedicine and Biotechnology 278062 (2011).
[7] R. S. J. Frackowiak, K. J. Friston, and C. Frith, Human brain function, 2nd ed., Academic Press, San Diego, (2003).
[8] Nicole A. Lazar, The Statiscal Analysis of Functional MRI Data. Springer, Berlin (2008).
[9] Orrin Devinsky and Aleksandar Beric, Eectrical and magnetic stimulation of the brain and spinal cord, Raven Press, New York (1993).
[10] Richard S. J. Frackowiak, John T. Ashburner, William D. Penny, Semir Zeki, Karl J. Friston, Christopher D. Frith, Raymond J. Dolan, and Cathy J. Price, Human Brain Function, Second Edition (2004).
[11] S. S. Choi, J. Magn. **15**, 210 (2010).
[12] Mark S. George and Robert H. Belmaker, Transcranial Magnetic Stimulation in Clinical Psychiatry (2006).
[13] Walter J. Levy, Roger Q., M. D. Cracco, Anthony T. Barker, and J. C. Rothwell, Magnetic Motor Stimulation: Basic Principles and Clinical Experience (1991).
[14] M. Inghilleri, A. Berardelli, P. Marchetti, and M. Manfredi, Exp. Brain. Res. **109**, 467 (1996).